87-37-526
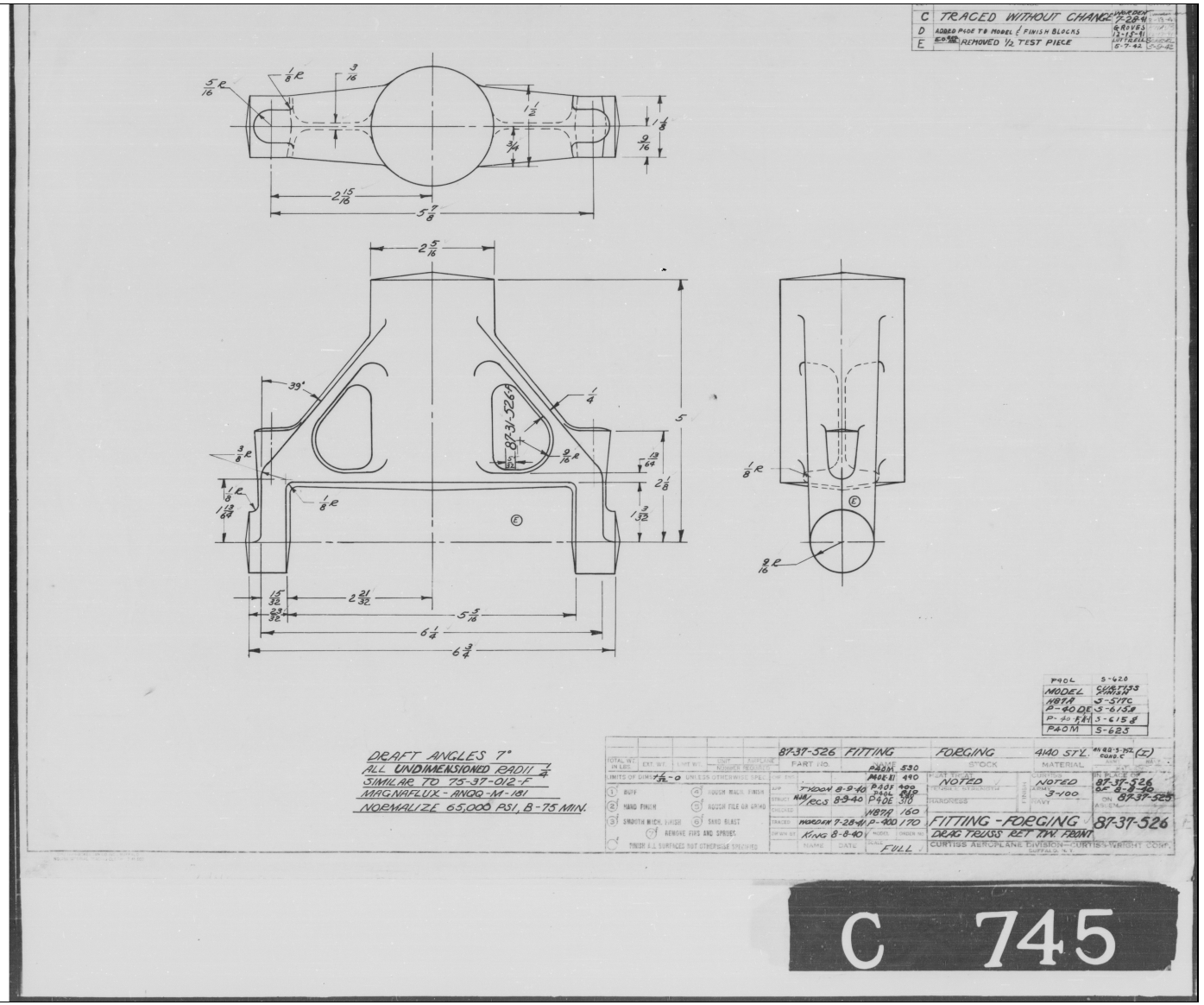
FITTING - FORGING DRAG TRUSS RET T.W. FRONT